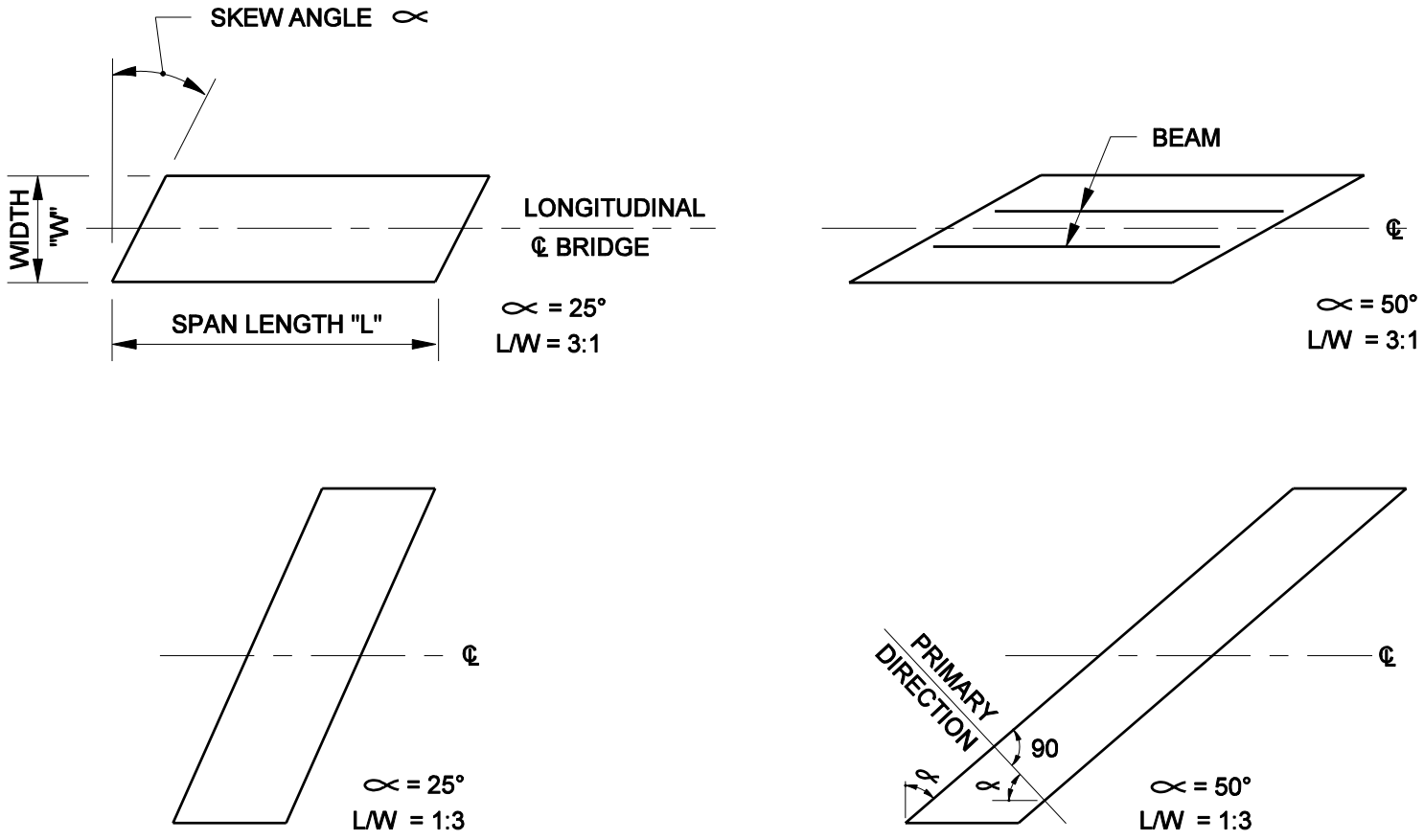

COMINATION OF SKEW ANGLE AND SPAN LENGTH/BRIDGE WIDTH RADTIO

Figure 61-4E